COLLIMATOR

QBH-1064-D30-4000

〉SPECIFICATIONS:

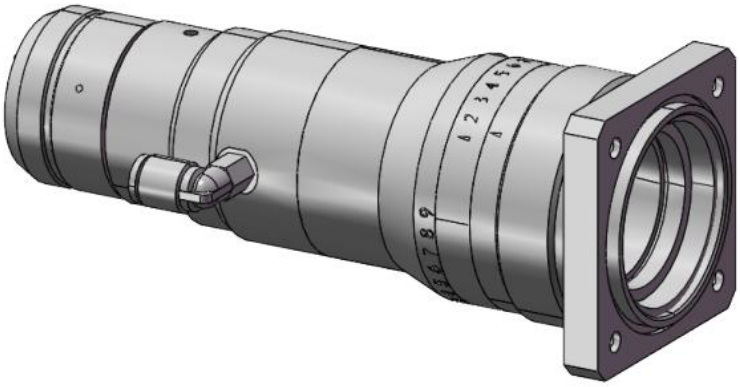

1. Design a laser band of 1030-1090mm, capable of withstanding a maximum continuous laser power of 4000W.
2. Integrated water cooling, connected to a Φ 6mm water cooling tube, equipped with a quick plug connector.
3. The adjustment range of the collimating lens is ± 3mm, and the adjustment resolution is 0.1mm.
4. Different focal length collimation modules have the same QBH interface and connection flange dimensions, but different total heights. The specific dimensions are subject to the table.
5. The default calibration at the factory is parallel light. When adjusting the divergence angle, loosen the locking top screw and turn the adjustment ring to the required divergence angle. After the adjustment is completed, lock the top screw.

〉FEATURES

Model	Clear Aperture(mm)	Maximum Allowable Na ($1/e^2$ half angle)	Maximum Collimated Spot (mm 1/e2)	Total Height L(mm)
QBH-1064-D30F40-AW	28	0.26	21	107.35
QBH-1064-D30F50-AW	28	0.21	21	129.79
QBH-1064-D30F60-AW	28	0.17	21	129.79
QBH-1064-D30F75-AW	28	0.13	21	147.72
QBH-1064-D30F80-AW	28	0.13	21	147.72
QBH-1064-D30F90-AW	28	0.12	21	162.5
QBH-1064-D30F100-AW	28	0.1	21	172.5
QBH-1064-D30F125-AW	28	0.08	21	198.26
QBH-1064-D30F135-AW	28	0.08	21	198.28
QBH-1064-D30F150-AW	28	0.07	21	226.13
QBH-1064-D30175-AW	28	0.06	21	254.09
QBH-1064-D30200-AW	28	0.05	21	266.1

〉DIMENSIONS

